OVEN AND CABINET PARTS

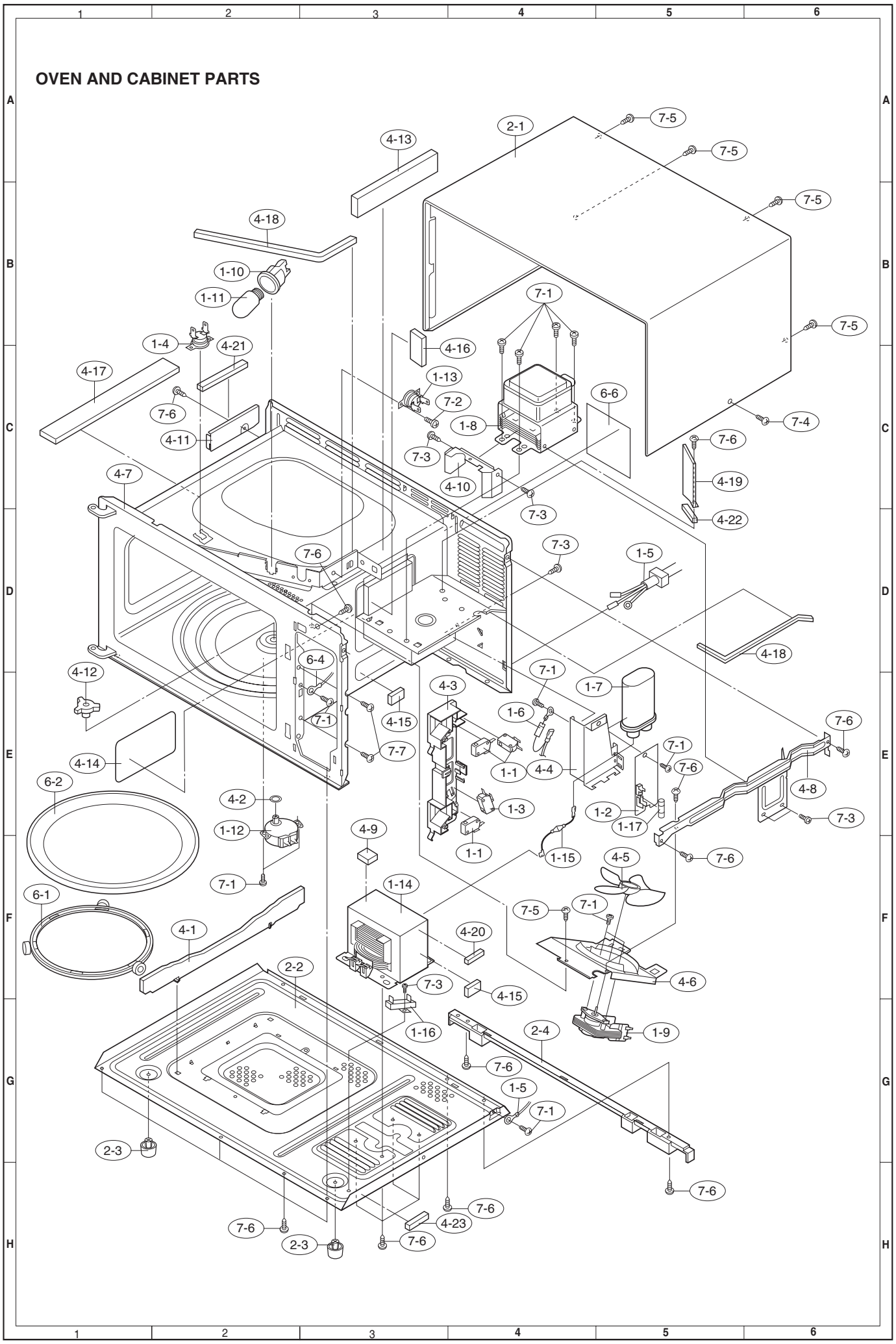

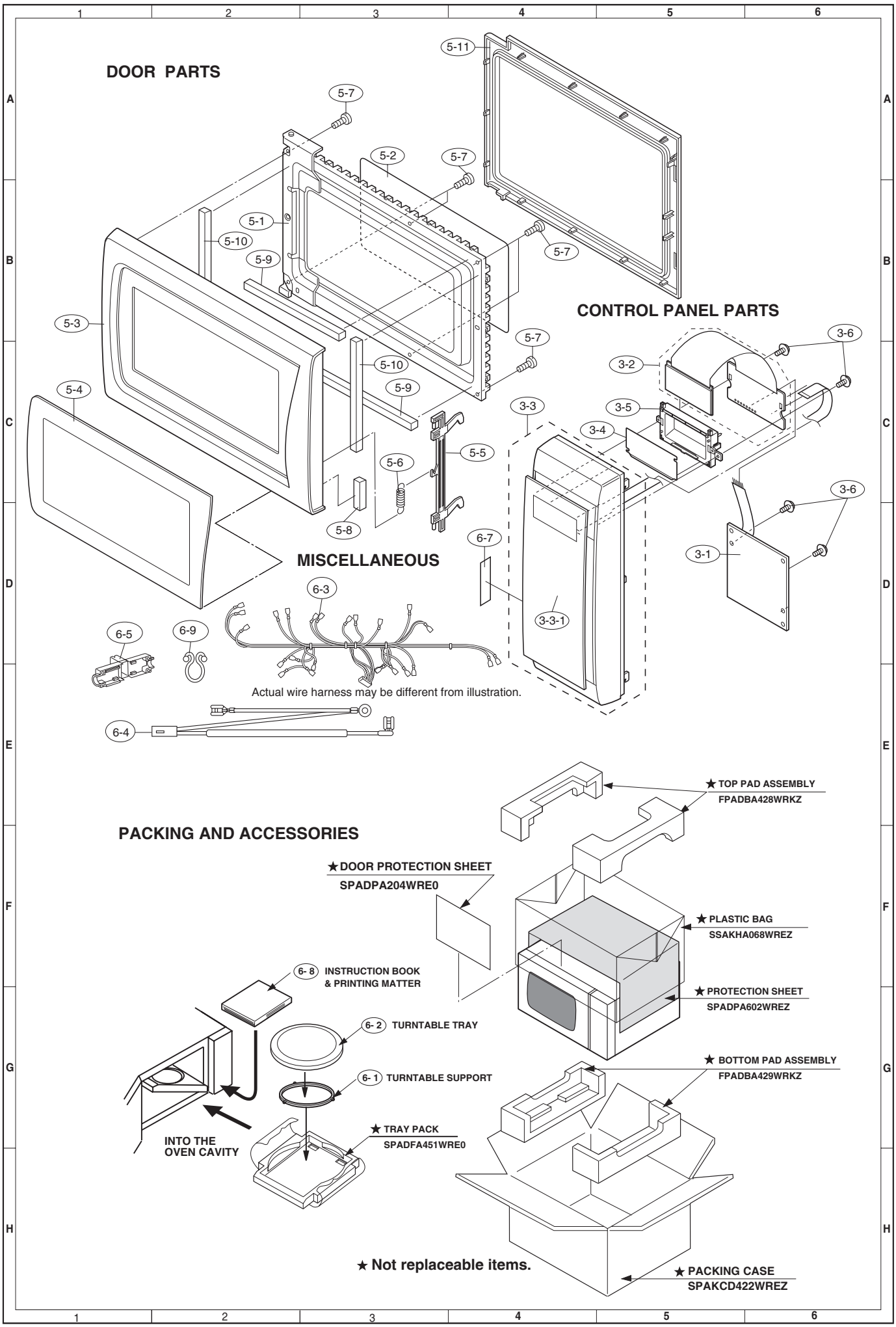

2000SHARP CORP. (7S0.730E) Printed in Australia